J10/P - Lincat Silverlink 600 Propane Gas Free-standing Twin Tank Fryer - 2 Baskets - W 600 mm - 24.0 kW

Deliver perfectly crisp on the outside and fluffy on the inside chips time after time with the Silverlink 600 Free Standing Gas Fryer.

- Double tank twin basket operation giving you the flexibility to cook different foods or loads simultaneously, delivering 46kg of chips an hour
- Thermostatically controlled to give accurate cooking temperatures throughout cooking. Flame failure device and top temperature cut out ensures safe operation.
- Cool zone collects cooking debris - gives cleaner cooking results and saves money by prolonging the life of the oil
- Piezo ignition for easy lighting
- Heavy duty nickel plated baskets for the most demanding of operations
- Internal drain off tap for easy removal of cooking oil

Specifications

Summary

Brand	Lincat
Range	Silverlink 600
Power Type	Gas
Gas Type	Propane Gas
Unit Type	Free-standing
Available in UK Only	No
UK Warranty	2 Years Parts and Labour Warranty
Export Warranty	Contact your local dealer
GTIN	5056105105091

Power and Performance

BTU per Hour	81,880
Total Power kW	24.0
Temperature Range °C	110-190
Temperature Control	Mechanical

Key Specifications

Number of Baskets	2
Number of Tanks	2
Gravity Filtration	No
Pumped Filtration	No
Drain Location	Internal

Capacity

Product Output per Hour	36kg chips -12mm [frozen], 46kg chips - 12mm [chil
Capacity Litres	2 x 12.0

Weights and Dimensions

Unit Height (External) mm	1060
Unit Width (External) mm	600
Unit Depth (External) mm	690
Net Weight Kg	73.7

Supply Connections

Requires Installation	Yes
Requires Electrical Supply	No
Gas Connection BSP	1/2"
Gas Consumption at full rate Propane m³ per Hour	1.62
Gas Pressure Propane mbar	25.0
Total heat input at full rate Propane kW	22.6
Total heat input at full rate Propane BTU per hour	81,880

Shipping

Packed Weight Kg	81.07
Packed Height cm	122
Packed Width cm	81.3
Packed Depth cm	68.5

Technical Picture

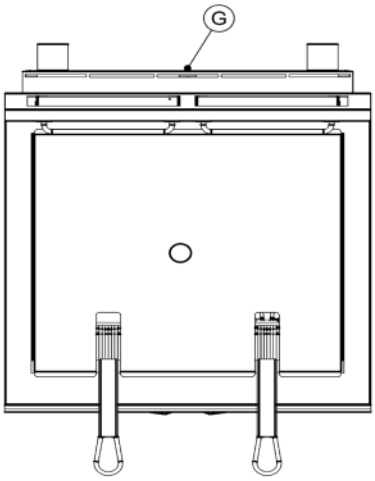

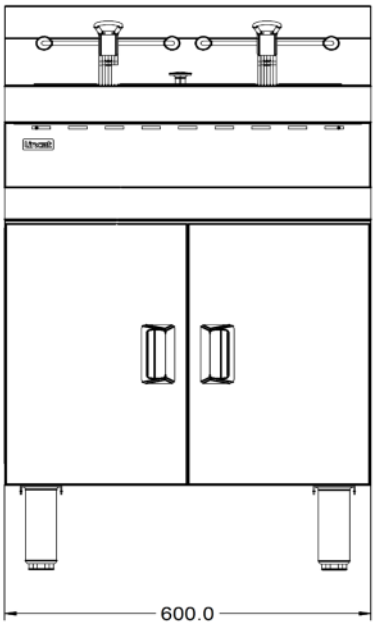

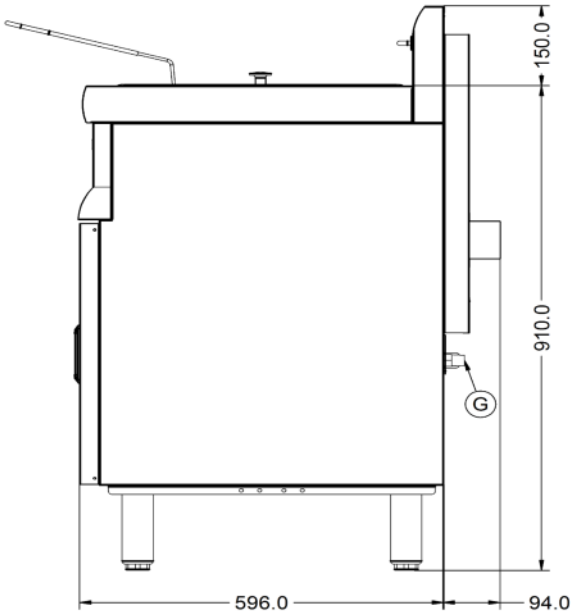

Lincat Limited

Whisby Road,

Lincoln, LN6 3QZ,

United Kingdom

Company No: 2175448

A member company of

THE MIDDLEBY CORPORATION

Customer Care

Tel: +44 1522 875500

Email: care@lincat.co.uk

Export Customers

Tel: +44 1522 875536

Email: export@lincat.co.uk

Opening Hours

Monday – Friday:

8.30am - 5pm